TECAPRES®

Ø63mm
1500daN

TPKN 1500

VDI SAFETY

PED 2014/68/UE

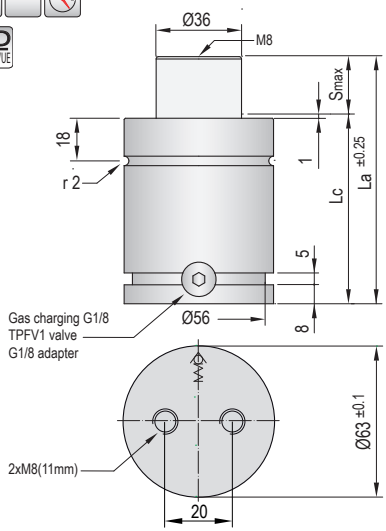

Pressure medium	Nitrogen (N_2)
Max. charging pressure	150 Bar
Min. charging pressure	35 Bar
Rod seal area	10,18 cm²
Operating temperature	0ºC - 80ºC
Force increase by temperature	0,33 %/ºC
Max. stem speed	1,6 m/s
Maintenance kit	Kit KN1500

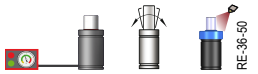

Maximum strokes / minute (at 20ºC)

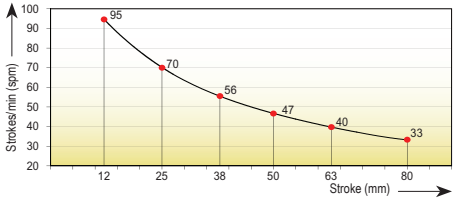

Code	Smax mm	La mm	Lc mm	Fa daN	90% F daN	100% Fc daN	P Bar	V l	Kg
TPKN 1500x12	12	84	72		1965	2030		0,047	1,30
TPKN 1500x25	25	110	85		2125	2225		0,079	1,53
TPKN 1500x38	38	136	98	1500 ±5%	2200	2315	148	0,111	1,99
TPKN 1500x50	50	160	110	(20ºC)	2240	2365	(20ºC)	0,140	2,25
TPKN 1500x63	63	186	123		2270	2405		0,172	2,41
TPKN 1500x80	80	220	140		2295	2435		0,214	2,50

Force/stroke ratio

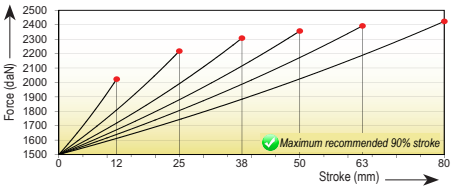

Initial force/charging pressure ratio

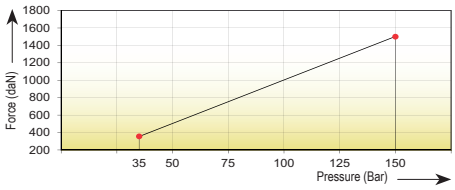

Assembly possibilities

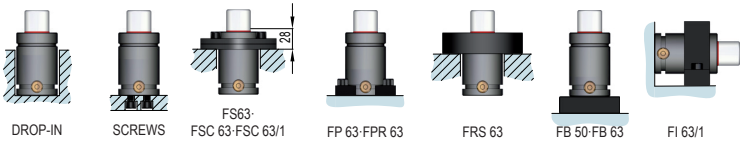

Follow guidelines
Page 287